542

SPLIT 2

DART AEROSPACE LTD	Work Order:	24417
Description: Wearpad	**Part Number:**	D3429-1
Drawing: D3429 Rev. A	**Qty:**	100
		Page 1 of 1

Step	Location	Procedure	By	Date	Qty
1	DC	Issue Traveler **Dwg not required**	AB	05/10/06	100
2	PG	Issue P/O: 2008782 **Email or ship DXF file to vendor** Laser Cut D3429-1 Flat pattern as per Dwg D3429 **Material release note required**	AB	05/10/06	100
3	RG	Receive and Inspect for transit damage **Ensure the material release note is attached**	CL	05/10/13	102
4	QC6	Inspect dimensions as per template D3429-1T1	[illegible]	05.11.10	101 PTO
5	GB	Deburr if necessary N/A			
6	GB	Form on Brake as per Dwg D3429 using Jigs DT8261 and DT8326. **Identify as D3429-1**	SB	05/11/10	100
7	GB	Form Joggle as per Dwg D3429 on brake using Jig DT8158	SB	05/11/10	100
8	WS	Weld hardcoat as per Dwg D3429 Qty / Description / Batch A/R / 7560Hardcoat / M19172 M19174	CPL	05.12.13	81
9	QC9	Inspect weld	[illegible]	05/12/13	81
10	QC5	Inspect work to Step 9	[illegible]	05/12/13	81
11	FP	Powder Coat Grey Sandtex (Ref. 4.3.5.6) as per QSI 005 4.3	FC	05 12 20	81
12	QC3	Inspect Powder Coat	[illegible]	05 12 21	81
13	FP	Identify and Stock	[illegible]	05.12.21	81
14	AC	Cost / part: _____	[illegible]	05.12.21	81
15	DC	Close W/O Inspect Level 21	[illegible]	05/12/21	81

Rev	Date	Change	Revised By	Approved
A	05.10.04	New Issue	KJ/EC	[illegible]

RELEASED
05.10.05

Dart Aerospace Ltd

W/O:		WORK ORDER CHANGES					
DATE	STEP	PROCEDURE CHANGE	By	Date	Qty	Approval Mfg / Design Mgr	Approval QC Inspector
05-11-10	4	Took one to use as template and Ident. Rl.	[illegible]	05-11-10	1	[illegible] 05/11/10	[illegible] 05-11-10

NCR:		WORK ORDER NON-CONFORMANCE (NCR)						
DATE	STEP	Description of NC Section A	Corrective Action Section B			Verification Section C	Approval Design Mgr	Approval QC Inspector
			Initial Design Mgr	Action Description Design Mgr	Sign & Date			

Part No: _____ PAR #: _____ Fault Category: _____ NCR: Yes (No) DQA: [illegible] Date: 05/12/21

NOTE: Date & initial all entries QA: N/C Closed: _____ Date: _____

H:\forms\Quality Assurance\approved forms\NCRWO revC

DESIGN	DRAWN BY	DART AEROSPACE USA, INC. PORT HADLOCK, WA	
CP	CP		
CHECKED	APPROVED	DRAWING NO. D3429	REV. A SHEET 1 OF 1
DATE 05.04.18		TITLE WEARPAD	SCALE 1:2
A	05.04.18	NEW ISSUE	

RELEASED 05.09.06

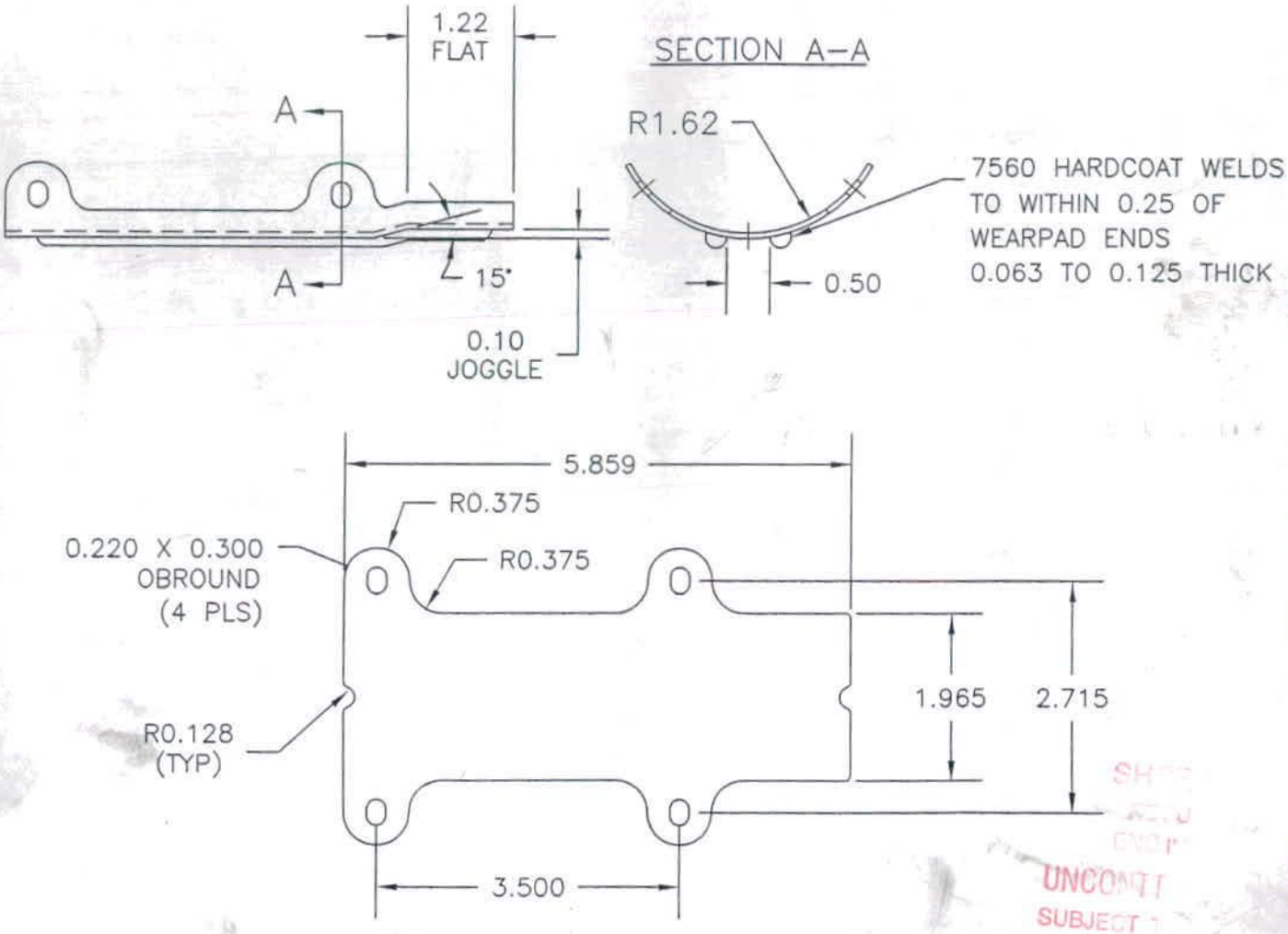

UNCONTROLLED
SUBJECT TO CHANGE
WITHOUT NOTICE
WORK ORDER
NO. 24417

D3429–1 WEARPAD

1) BREAK ALL SHARP CORNERS 0.063 MAX
2) MATERIAL: 16 GAUGE AISI 1010–1025 OR ASTM A36/A366 STEEL (0.063 THICK)
3) FINISH: POWDER COAT GREY (REF. 4.3.5.5) PER DART QSI 005
4) TOLERANCES ARE PER DART QSI 018 UNLESS OTHERWISE NOTED
5) ALL DIMENSIONS ARE IN INCHES
6) WELD PER DART QSI 004

Copyright © 2005 by DART AEROSPACE USA, INC.

THIS DOCUMENT IS PRIVATE AND CONFIDENTIAL AND IS SUPPLIED ON THE EXPRESS CONDITION THAT IT IS NOT TO BE USED FOR ANY PURPOSE OR COPIED OR COMMUNICATED TO ANY OTHER PERSON WITHOUT WRITTEN PERMISSION FROM DART AEROSPACE USA, INC.

Job Costing Report

Dart Aerospace Ltd.
Hawkesbury

Oct 05, 2005
10:49 am

Work Order No : 0024417
Project Name : D3429-1
Project For : WK542
Work Order Type : Main
Main WO Number :
House Part Number : D3429-1
Description : Wearpad
Manufactured : Yes
Amount Req'd : 100
Amount Done : 0
Start Date : 10-04-05
Est Finish Date : 10-13-05
Act Finish Date :
Drawings Reqd : No
Ok for Approval :
Approval Rec'd :

Department Code:
Burden Flags : NNNNNNN
WO Status : Open
Invoice State : Not Invoiced
Invoice Date :
Invoice Number :
Invoice Amount : 0.00

Order Entry No :
OE Value : 0.00

Est Mark Up : 0.000%
Actual Mark Up : 0.000%

$0 Posted to Finished Goods

	Estimated	Actual	Var. %	Posted	To Post
Material Cost :	0.00	0.00	0.00	0.00	0.00
Engineering Hours :	0.00	0.00	0.00		
Engineering Cost :	0.00	0.00	0.00	0.00	0.00
Production Hours :	0.00	0.00	0.00		
Production Cost :	0.00	0.00	0.00	0.00	0.00
Packaging Hours :	0.00	0.00	0.00		
Packaging Cost :	0.00	0.00	0.00	0.00	0.00
OverHead Hours :	0.00	0.00	0.00		
OverHead Cost :	0.00	0.00	0.00	0.00	0.00
CNC Hours :	0.00	0.00	0.00		
CNC :	0.00	0.00	0.00	0.00	0.00
Misc. Hours :	0.00	0.00	0.00		
Misc. :	0.00	0.00	0.00	0.00	0.00
Burden :	0.00	0.00	0.00		
Total Cost :	0.00	0.00	0.00		
Mark up :	0.000	0.000			
Selling Cost :	0.00	0.00			

	Estimated	Actual
Labour Hrs/Amount Done :	0.00	0.00
Profits/(Loss) :	0.00	0.00

NEW ZEALAND STEEL

New Zealand Steel Limited
Glenbrook, South Auckland
Postal: Private Bag 92121, Auckland, New Zealand
Telephones: (09) 375 8999 / 375 8111 Auckland
(09) 235 8069 / 235 3535 Waiuku
Fax: (09) 375 8958

TEST CERTIFICATE

Ref: 5078/21768

CUSTOMER	Wilkinson P5012SDI003	SPECIFICATION	ASTMA1008 CS Type A	CERTIFICATE No	TC109561
CUSTOMER O/N	90-21N-540	PRODUCT	CRA WIDE COIL	PAGE	1 of 1
MILL O/N	471159	DIMENSIONS	0.055" × 48" × Coil	DATE	23 April 2005

PACK NUMBER	HEAT No	CHEMICAL COMPOSITION PERCENT															MECHANICAL TESTS (TEST SPECIFICATION - ASTMA370)						
		C	Si	Mn	P	S	Cu	Ni	Cr	Mo	V	Nb	Ti	Al	B	N2	CE( )	BEND	YIELD	T.S.	%ELONG	HARDNESS	r	LENGTH
		x100			x1000										x10000		x100	180°			G.L.=	HRB	( )	(feet)
R9-457097-00	640590	4	TR	20	13	17	12	17	20	1	8	1	1					Good				46		1562
R9-457098-00	640590	4	TR	20	13	17	12	17	20	1	8	1	1					Good				46		1483
R9-457099-00	640590	4	TR	20	13	17	12	17	20	1	8	1	1					Good				46		1562
R9-457100-00	640590	4	TR	20	13	17	12	17	20	1	8	1	1					Good				46		1496
R9-457101-00	640590	4	TR	20	13	17	12	17	20	1	8	1	1					Good				47		1562
R9-457102-00	640590	4	TR	20	13	17	12	17	20	1	8	1	1					Good				47		1555

YIELD	GAUGE LENGTH (G.L.)			PLASTIC STRAIN RATIO (r)		IMPACT TEST			CARBON EQUIVALENT VALUE (CE)	
(A)=0.2% PROOF STRESS	(A)=200mm	(C)=80mm	(E)=2"	(A)=r0	(C)=r45	(A)=10mm x 10mm	(C)=5mm x 5mm		(A)=C+Mn/6	(C)=C+Mn/6+Si/24
(B)=LOWER YIELD STRESS	(B)=50mm	(D)=5.65 ? So	(F)=8"	(B)=r90	(D)=(r0+r90+2r45) / 4	(B)=7.5mm x 10mm	(D)=2.5mm x 10mm	(E)=5mm x 10mm	(B)=C+Mn/6+(Cr+V+Mo)/5+(Cu+Ni)/15	(D)=

WE HEREBY CERTIFY THAT THE MATERIAL DESCRIBED HEREIN HAS BEEN TESTED AND INSPECTED WITH SATISFACTORY RESULTS IN ACCORDANCE WITH THE REQUIREMENTS OF THE ABOVE SPECIFICATION

APPROVED Satish Misra
QC METALLURGIST

16 ga crms

0627MD015-1 T M INDUSTRIAL (P5012SDI003.640590)

Date: Friday, 11/18/2005 9:55:16 AM
User: Linda Lacelle

Process Sheet

Customer : CU-DAR001 Dart Helicopters Services
Job Number : 24417
Estimate Number : 10700
P.O. Number :
This Issue : 11/18/2005 **S.O. No.** :
Prsht Rev. : NC
First Issue : / / **Type** : PURCHASED PARTS
Previous Run :
Written By : _____
Checked & Approved By : _____
Comment : Est: A 05.10.04 New Issue KJ/EC

Drawing Name : WEARPAD
Part Number : D34291
Drawing Number : D3429 REV A
Project Number :
Drawing Revision : A
Material :
Due Date : 11/30/2005 **Qty:** 100 **Um:** Each

Additional Product

Job Number:

Seq. #:	Machine Or Operation:	Description :
1.0	PG	PURCHASING

Comment: PURCHASING
Issue P/O: _____
Email or ship DXF file to vendor
Laser Cut D3429-1 Flat pattern as per Dwg D3429
Material release note required

2.0	D34291F	WEARPAD
3.0	PACKAGING 1	PACKAGING RESOURCE #1

Comment: PACKAGING RESOURCE #1
Receive & Inspect For Transit Damage
Ensure material release note is attached

4.0	QC6	DIMENSIONAL CHECK

Comment: DIMENSIONAL CHECK
Inspect dimensions as per template D3429-1T1

5.0	BRAKE NC	NC BRAKE

Comment: NC BRAKE
Deburr if necessary
Form on Brake as per Dwg D3429 using Jigs DT8261 and DT8326.Identify as D3429-1
Form Joggle as per Dwg D3429 on brake using Jig DT8158

Form: rprocess

Date: Friday, 11/18/2005 9:55:16 AM
User: Linda Lacelle

Process Sheet

Customer: CU-DAR001 Dart Helicopters Services **Drawing Name:** WEARPAD

Job Number: 24417 **Part Number:** D34291

Job Number:

Seq. #:	Machine Or Operation:	Description :
6.0	LARGE FAB 1	LARGE FABRICATION RESOURCE 1

Comment: LARGE FABRICATION RESOURCE 1

Qty	Description	Batch
A/R	560Hardcoat	_____

Weld hardcoat as per Dwg D3429

7.0	QC9	VISUAL WELDING INSPECTION

Comment: VISUAL WELDING INSPECTION

8.0	QC5	INSPECT WORK TO CURRENT STEP

Comment: INSPECT WORK TO CURRENT STEP

9.0	POWDER COATING	POWDER COATING

Comment: POWDER COATING

Powder Coat Grey Sandtex (Ref: 4.3.5.6) as per QSI 005 4.3

10.0	QC3	INSPECT POWDER COAT/CHEMICAL CONVERSION

Comment: INSPECT POWDER COAT/CHEMICAL CONVERSION

11.0	PACKAGING 1	PACKAGING RESOURCE #1

Comment: PACKAGING RESOURCE #1

Identify and Stock

Location:_____

12.0	DC	DOCUMENT CONTROL

Comment: DOCUMENT CONTROL

Inspection Level 21

Job Completion

Form: rprocess

Job Costing Report

Dart Aerospace Ltd.
Hawkesbury

Nov 08, 2005
12:08 pm

Work Order No : 0024417
Project Name : D3429-1
Project For : WK542
Work Order Type : Main
Main WO Number :
House Part Number : D3429-1
Description : Wearpad
Manufactured : Yes
Amount Req'd : 100
Amount Done : 0
Start Date : 10-04-05
Est Finish Date : 10-13-05
Act Finish Date :
Drawings Reqd : No
Ok for Approval :
Approval Rec'd :

Department Code:
Burden Flags : NNNNNNN
WO Status : Open
Invoice State : Not Invoiced
Invoice Date :
Invoice Number :
Invoice Amount : 0.00

Order Entry No :
OE Value : 0.00

Est Margin : 0.000%
Actual Margin : 0.000%

$0 Posted to Finished Goods

	Estimated	Actual	Var. %	Posted	To Post
Material Cost :	0.00	426.36	100.00	0.00	426.36
Engineering Hours :	0.00	0.00	0.00		
Engineering Cost :	0.00	0.00	0.00	0.00	0.00
Production Hours :	0.00	0.00	0.00		
Production Cost :	0.00	0.00	0.00	0.00	0.00
Packaging Hours :	0.00	0.00	0.00		
Packaging Cost :	0.00	0.00	0.00	0.00	0.00
OverHead Hours :	0.00	0.00	0.00		
OverHead Cost :	0.00	0.00	0.00	0.00	0.00
CNC Hours :	0.00	0.00	0.00		
CNC :	0.00	0.00	0.00	0.00	0.00
Misc. Hours :	0.00	0.00	0.00		
Misc. :	0.00	0.00	0.00	0.00	0.00
Burden :	0.00	0.00	0.00		
Total Cost :	0.00	426.36	100.00		
Margin :	0.000	0.000			
Selling Cost :	0.00	426.36			

	Estimated	Actual
Labour Hrs/Amount Done :	0.00	0.00
Profits/(Loss) :	0.00	(-426.36)